STAINLESS STEEL 90° ACTUATOR

SB AT654

Double acting & spring return · 90°

T.D.S. SB AT654-DM · issued 06/11

Air Torque SB AT654 pneumatic 90° actuator, offered double acting (D) or spring return (S). Full output torque, dimensions and ISO 5211 mounting data from Air Torque T.D.S. SB AT654-DM.

- Double acting (D) and spring return (S) versions
- 8 spring sets, S 05 to S 12
- ISO 5211 F12 + F16 standard; F14 optional
- Pressure connection G3/8", ports 2 and 4
- Drive shaft with integral top, 4x4 · ST / HT / LLT options

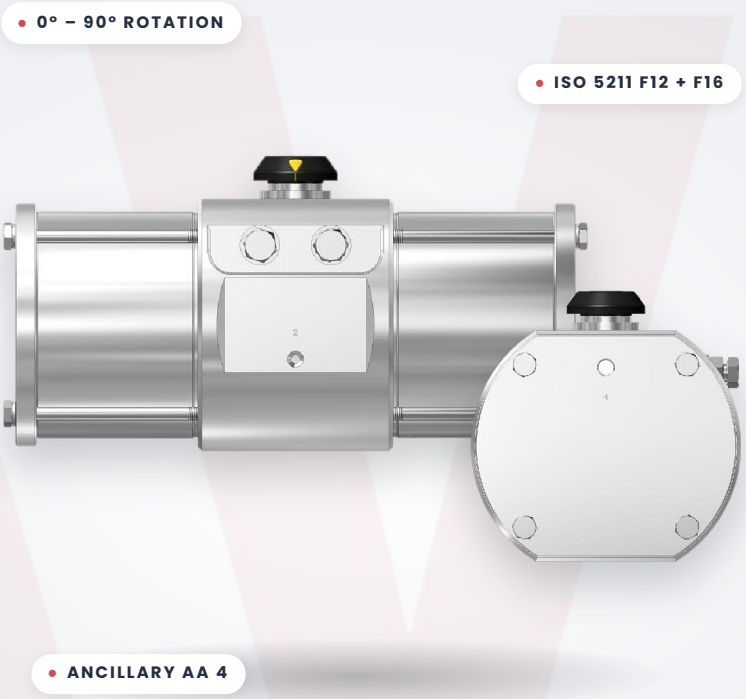

8 bar	2144 Nm	124.8 kg	630 mm
MAX. PRESSURE	DA TORQUE AT 6 BAR	APPROX. WEIGHT, D	OVERALL LENGTH

Output torque.

NM AT SUPPLY PRESSURE

DOUBLE ACTING (D)

Pressure	2.5 bar	3 bar	3.5 bar	4 bar	4.2 bar	4.5 bar	5 bar	5.5 bar	6 bar	7 bar	8 bar	Approx. weight (kg)
D	893	1072	1251	1430	1501	1608	1787	1966	2144	2502	2859	124.8

SPRING RETURN (S)

air stroke 0° → 90° · spring stroke 90° → 0°

Spring set	2.5 bar		3 bar		3.5 bar		4 bar		4.2 bar		4.5 bar		5 bar		5.5 bar		6 bar		7 bar		8 bar		Spring stroke		Approx. weight (kg)
	Start	End	Start	End	Start	End	Start	End	Start	End	Start	End	Start	End	Start	End	Start	End	Start	End	Start	End	Start	End	
S 05	**533**	**372**	712	551	890	730	1069	908	1141	980	1248	1087	1426	1266									**521**	**360**	**130.8**
S 06	461	268	**640**	**447**	818	625	997	804	1068	876	1176	983	1354	1162	1533	1340							**625**	**433**	**131.9**
S 07			568	343	**746**	**521**	925	700	996	771	1104	879	1282	1057	1461	1236	1640	1415					**730**	**505**	**133.1**
S 08					674	417	**853**	**596**	**924**	**667**	1032	774	1210	953	1389	1132	1568	1310	1925	1668			**834**	**577**	**134.3**
S 09							781	491	852	563	**959**	**670**	1138	849	1317	1028	1495	1206	1853	1564	2210	1921	**938**	**649**	**135.5**
S 10											887	566	**1066**	**745**	1245	923	1423	1102	1781	1459	2138	1817	**1042**	**721**	**136.7**
S 11													994	640	**1173**	**819**	1351	998	1709	1355	2066	1713	**1146**	**793**	**137.9**
S 12															1101	715	**1279**	**894**	1637	1251	1994	1608	**1251**	**865**	**139.1**

Highlighted figures are shown in bold on the Air Torque data sheet. Blank cells: no value given by Air Torque for that spring set and pressure.

DIMENSIONS

Drawing (mm)

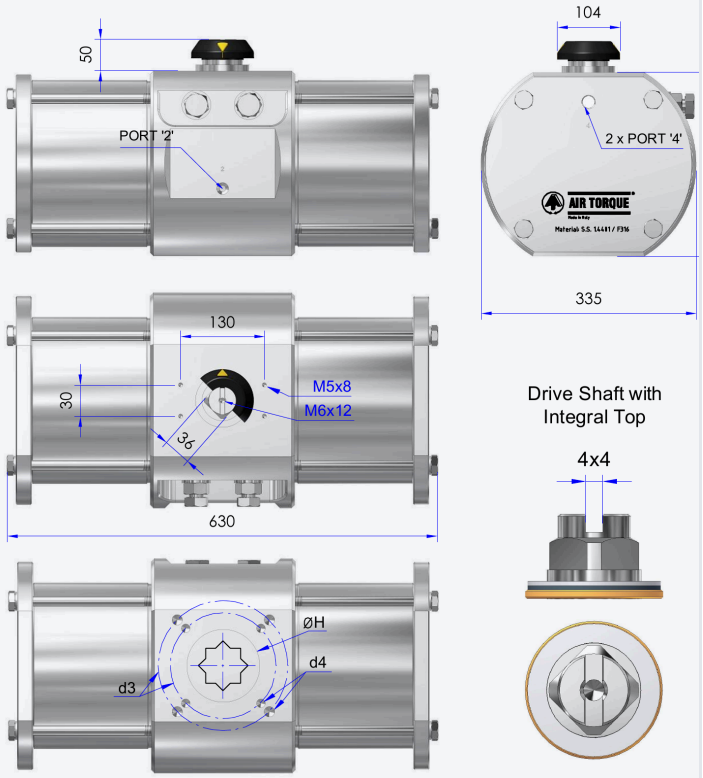

ISO 5211 FLANGE DIMENSIONS

	STD		Optional
ISO 5211	**F12 + F16**		**F14**
Ø d2	NA		100
Ø d3	125	165	140
d4	M12x18	M20x30	M16x24
Ø H	93		100
Ch x l min.	DS36x39 – DS46x49		
h min.	2.5	2.5	2.5
h1	NA	1.5	1.5

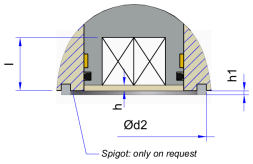

Spigot detail

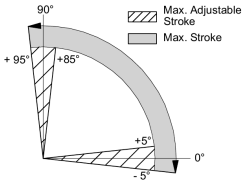

Rotation & stroke adjustment

Technical data.

SB AT654 · T.D.S. SB AT654-DM

Max. pressure	8 bar
Rotation (standard)	0° – 90°
Stroke adjustment	For 1° adjustment, 1/4 turn
Chamber Ø	240 mm
Air volume	Opening 10 L · closing 15.2 L
Moving time (A)	D: opening 3.5 s · closing 4.0 s S: opening 4.1 s · closing 4.6 s

Pressure connection	Ports 2 and 4 · G3/8"* **NPT (ANSI B1-20-1) threads available on request*
Ancillary attachment	AA 4
Temperature (B)	ST (standard): -40 to +80 °C HT (high temperature): -15 to +150 °C LLT (extreme low temperature): -55 to +80 °C
Operating medium	Free of dust and oil – see note below

Operating medium. The operating medium must be free of dust and oil. Maximum particle size 30 µm (ISO 8573 Part 1, Class 5). To prevent water condensation and/or solidification (ice when the actuator works below 0 °C), the operating medium must have a dew point equal to -20 °C or at least 10 °C below the ambient temperature (ISO 8573 Part 1, Class 3).

A) The moving times above were obtained under the following test conditions: (1) room temperature, (2) actuator stroke 90°, (3) solenoid valve with 11 mm orifice and flow capacity Qn 6000 L/min, (4) inside pipe diameter 11 mm, (5) medium clean air, (6) air supply pressure 5.5 bar (79.75 psi), (7) actuator without external resistance load. In field applications where one or more of these parameters differ, the moving time will be different.

B) Every temperature range option requires proper components and lubricant. See Air Torque technical data sheet T.D.S. S00501E.

Data supplied by Air Torque S.p.A. and provided for reference only. Specifications may change without notice – please confirm details with Actuation Valve & Control before ordering.

Sizing an Air Torque actuator?

Talk to our UK team about torque sizing, spring sets, mounting kits and complete actuated valve packages.

actuation.co.uk